Fitting / Order form

Prices valid from: 1/apr/25

TiLite TR

Dealer information	
Customer (name / code)	/
Contact	
Address	
Post code / City	/
Phone / Fax	/

Delivery address	
Name	/
Address	
Post code / City	/
Phone	
E-mail	
Your reference	
Your order number	

Fitting date		User weight	
Fitting date (dd-mm-yyyy)			kg

☑ Required choice
☐ / ○ Optional choice
☑ / ● Default required option

code			Price excl VAT	Price incl VAT
FRAME STYLE				
TRFS1	☐	**TILITE TR SERIES 3** *(Minimal Adjustability. 265 Pound (120 kg)Weight Limit)*	3745.00	
TRRFR1	☐	**FRAME, REINFORCED** *(No charge when 20" Rear Seat Width and 20" Seat Depth or Heavy Duty is selected.)*	0.00	
LANGUAGE USER MANUAL				
Language		Choose		
FRAME FINISHES				
TRFF1	☐	TITANIUM - SATIN FINISH *(Available with Titanium Frame only.)*	0.00	
TRSCBT1	☐	BUFFING PADS SATIN FINISH		
TRFF3	☐	TATTOO ON TITANIUM AND ALUMINIUM FRAME *(Tattoos on front frame tubes. Titanium frame finished in Satin. Tattoos will be trimmed and adjusted to fit your frame.)*	313.00	
TRFF44	☐	TATTOO FLOWER GARDEN	0.00	
TRFF45	☐	TATTOO NEED FOR SPEED	0.00	
TRFF43	☐	TATTOO MOSAIC	0.00	

COLOR

High Gloss Paint	☐	TRTFF8	HIGH GLOSS BLACK	☐	TRTFF10	TILITE RED	☐	TRTFF29 NEON PINK
Metallin Paint	☐	TRTFF14	OCEAN BLUE METALLIC	☐	TRTFF15	TANGERINE METALLIC	☐	TRTFF29 ACID GREEN METALLIC
Pearlescent Paint	☐	TRTFF17	MIDNIGHT BLUE PEARL	☐	TRTFF18	WHITE PEARL		
Matte Paint	☐	TRTFF19	BLACK LAVA	☐	TRTFF27	TITANIUM GRAY		
Candy Paint	☐	TRTFF22	RUBY RED	☐	TRTFF23	AZURE BLUE	☐	TRTFF29 ELECTRIC PLUM
Matte texture Paint	☐	TRTFF40	HYPER BLUE	☐	TRTFF41	FLAME ORANGE	☐	TRTFF29 OD GREEN

COLOR ANODIZE PACKAGE

(Color Anodize Package includes: Caster Mount, Caster Fork, and Caster Caps. If no anodize color is selected, the default will be black.)

TRANO1	○	COLOR ANODIZE PACKAGE- BLACK	0.00
TRANO12	○	COLOR ANODIZE PACKAGE- GOLD	49.00
TRANO15	○	COLOR ANODIZE PACKAGE- GREEN	49.00
TRANO13	○	COLOR ANODIZE PACKAGE- PURPLE	49.00
TRANO14	○	COLOR ANODIZE PACKAGE- ORANGE	49.00
TRANO10	○	COLOR ANODIZE PACKAGE- BLUE	48.00
TRANO11	○	COLOR ANODIZE PACKAGE- RED	49.00

TiFit: TAILORED INDIVIDUALIZED FRAME

REAR SEAT WIDTH (A)

Measure from outside of seat tube at back post to the outsid of the opposite seat tube at back post to the outside of the opposite seat tube at back post.

TRSW1-12	○	SEAT WIDTH 12" ◉ 13" ○ 14" ○ 15" ○ 16" ○ 17" ○ 18" ○ 19"	0.00
TRSW2	○	SEAT WIDTH 20" *(> 20" size available through CMD)*	447.00

FRONT SEAT WIDTH (SEAT TAPER) (T)

Measure from inside of front frame tube to inside of opposite front frame tube. (Required with V-Front End (V). Not Available with Standard Front End (I))

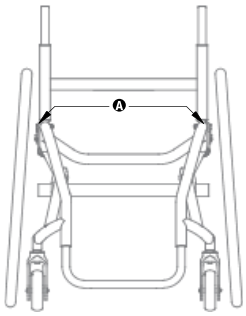

TRFSW1	☐	FRONT SEAT WIDTH- NO TAPER	0.00
TRFSW2	☐	FRONT SEAT WIDTH- 1" TAPER *(3" Narrower than Rear Seat Width A. Includes Tension Adjustable by Straps Seat Upholstery.)*	254.00
TRFSW4	☐	FRONT SEAT WIDTH- 2" TAPER *(4" Narrower than Rear Seat Width A. Includes Tension Adjustable by Straps Seat Upholstery.)*	254.00

SEAT DEPTH (B)

Measure from front of back post to the front edge of seat sling. Frame bend will start .5" in front of seat sling unless Custom Frame Depth is specified, or the combination of specifications affect the rolling dynamics of the chair.

TRSD1-12	○	SEAT DEPTH 12" ○ 13" ○ 14" ○ 15" ○ 16" ○ 17" ○ 18" ○ 19"	0.00
TRSD2	○	SEAT DEPTH 20" *(Custom seat depth available through CMD)*	471.00

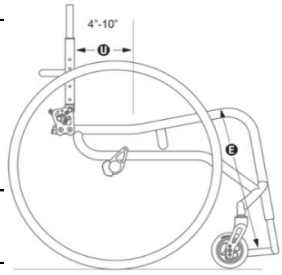

ERGONOMIC SEAT (U)

Measure from front of back post to beginning of upward bend of seat tube.

TRERG1-5	○	**ERGONOMIC SEAT 5" ○ 6" ○ 7" ○ 8" ○ 9"** *(Not available with Tension Adjustable Bolt On Seat Upholstery)*	372.00

FRONT SEAT HEIGHT (C)

Measure from floor to top of seat tube at front edge of seat sling

TRFSH1-15	○	FRONT SEAT HIGHT 15" ○ 15.5" ○ 16" ○ 16.5" ○ 17" ○ 17.5" ○ 18" ○ 18.5" ○ 19" ○ 19.5" ○ 20" ○ 20.5" ○ 21"	0.00

REAR SEAT HEIGHT (D)

Measure from floor to top of seat tube at back post.

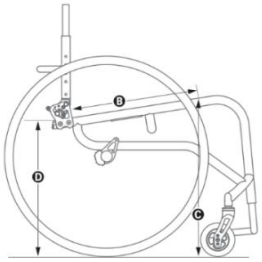

TRRSH1-12.5	○ 12.5" ○ 14.5" ○ 16.5" ○ 18.5" ○ 13" ○ 15" ○ 17." ○ 19" ○ 13.5" ○ 15.5" ○ 17.5" ○ 19.5" ○ 14" ○ 16" ○ 18." ○ 20"		0.00

Rear wheel size	Rear seat height
20"	12.5"-20"
22"	13.5"-20"
24"	14.5"-20"
25"	15.0"-20"
26"	15.5"-20"

FRONT ANGLE or OVERALL FRAME LENGTH

Select one. If Overall Frame Length is selected, front angle will be bent to achieve requested length.

TRFA1-70	○	FRONT ANGLE 70°		0.00
TRFA1-75	○	FRONT ANGLE 75°		0.00
TRFA1-80	○	FRONT ANGLE 80°		0.00
TRFA1-85	○	FRONT ANGLE 85°	*(L) Measure from frame front to floor. (Not available with 6" Front Wheels.)*	0.00
TRFA1-90	○	FRONT ANGLE 90°	*(Not available with 5" or 6" Front Wheels.)*	0.00
TRFA2	○	OVERALL FRAME LENGTH *(Measure from front of backrest to Front Edge of Footrest.)*	M= mm	0.00

SEAT TO FOOTREST (E)

Measure from front edge of seat sling to top rear of footrest.

STFR-xxx ☐ STANDARD FOOTREST 0.00

Measurement must be at least 2" shorter than Front Seat Height (C).

○ 13.5"	○ 15"	○ 16.5"	○ 18."
○ 14"	○ 15.5"	○ 17."	○ 18.5"
○ 14.5"	○ 16"	○ 17.5"	○ 19"

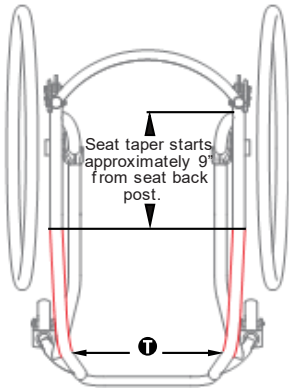

TRFTR3	☐	FOOTREST ANGLE ADJUSTABLE	0.00
TRFTR1	☐	FOOTREST TITANIUM WITH FLAT ABS COVER	176.00
TRFTR2	☐	FOOTREST TITANIUM OPEN LOOP	226.00
TRFTR12	☐	FOOTREST FLIP-BACK	194.00
STFR-xxx	☐	HIGH MOUNTED FOOTREST	

Measurement must be at least 2" shorter than Front Seat Height (C).

STFR-S	○	7" - 9"	Set at: mm	0.00
STFR-M	○	9"- 11"	Set at: mm	
STFR-L	○	11"- 13"	Set at: mm	
TRFTR4	☐	FOOTREST ANGLE ADJUSTABLE HIGH MOUNT		92.00

FOOTREST WIDTH (I) or (V)

Select either a Standard Front End (I) if no Seat Taper (T) is selected or a V-Front End (V) if a Seat Taper (T) is selected

STANDARD FRONT END (I)

Find your Rear Seat Width (A) in the Chart below and select one of the options to the right. Measure from inside of front frame tube to inside of opposite front frame tube.

TRFE1-0 ☐ STANDARD FRONT END NO TAPER 0.00

REAR SEAT WIDTH *(Outside measurement)*	**No Taper** *(2" Narrower than rear seat width)*	**2" Taper** *(4" Narrower than rear seat width)*	***4" Taper*** *(6" Narrower than rear seat width)*
12"	○ *10"*	○ *8"*	
13"	○ *11"*	○ *9"*	
14"	○ *12"*	○ *10"*	○ *8"*
15"	○ *13"*	○ *11"*	○ *9"*
16"	○ *14"*	○ *12"*	○ *10"*
17"	○ *15"*	○ *13"*	○ *11"*
18"	○ *16"*	○ *14"*	○ *12"*
19"	○ *17"*	○ *15"*	○ *13"*
20	○ *18"*	○ *16"*	○ *14"*

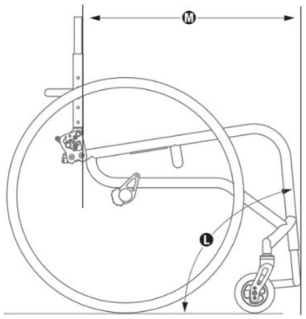

V-FRONT END (V)

Measure from inside of front frame tube to inside of opposite front frame tube 2-1/2" above footrest. (Titanium Footrests have 1" of adjustment up and down. Not available with Ergonomic Seat frames.)

TRFE2-9	☐	FOOTREST FRONT END WIDTH--V 9"	104.00

○ 10" ○ 11" ○ 12" ○ 13" ○ 14" ○ 15"

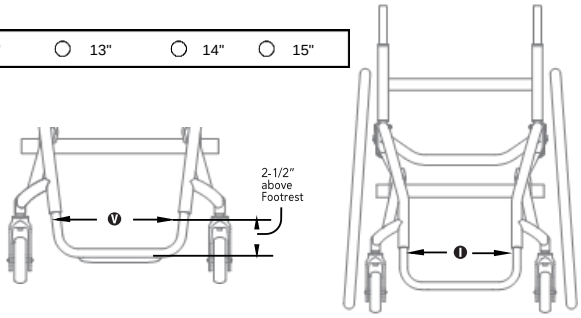

BACKREST UPHOLSTERY

(Want more seating options? Click here to view the new TiLite Seating Order Form.)

TRBUP2	☐	BACK UPHOLSTERY VELCRO ADJUSTABLE *(Not available with Fold-Down Push Handles.)*	0.00

Tension Adjustable by Straps

(Required with Fold-Down Push Handles.)

TRBUP3	☐	BACK UPHOLSTERY STRAPS TENSION ADJUSTABLE	100.00
TRBUP5	☐	UPHOLSTERY AIR BREATHABLE *(Not available with Ultrasuede Backrest Stripe.)*	176.00
TRUPC3-BL	☐	UPHOLSTERY BACKREST STRIPE ULTRASUEDE BLACK	95.00
TRBUP0	☐	WITHOUT BACK UPHOLSTERY	0.00

SEAT BACK TYPE/PUSH HANDLES/SEAT BACK HEIGHT (F)

Measure from top of back post to top of seat tube at rear of frame.

TRSB1	☐	FOLDING ALUMINUM ADJUSTABLE HEIGHT SEAT BACK *(Required for Heavy Duty Frame)*	0.00
TRSB2	☐	FOLDING TITANIUM ADJUSTABLE HEIGHT SEAT BACK *(Titanium back will match Frame Finish. Not available with Bolt-On Push Handles.)*	176.00
TRSB15	☐	SEAT BACK, NON-FOLDING, FIXED-HEIGHT TITANIUM *(Titanium back will match Frame Finish. Not available with Push Handles.)*	254.00

TISHAFT™ BACK RELEASE BARS

(Not available with Non-Folding, Fixed Height Titanium Back.)

TRSB3	☐	BACK RELEASE BAR ALUMINUM TISHAFT	0.00
TRSB5	☐	BACK RELEASE BAR CARBON FIBER	63.00

PUSH HANDLES (select above)

TRSB6	☐	PUSH HANDLES INTEGRATED	0.00
TRSB7	☐	PUSH HANDLES INTEGRATED FOLD-DOWN *(Requires Tension Adjustable by Straps Back Upholstery.)*	104.00
TRSB8	☐	PUSH HANDLES BOLT ON *(Includes 4" Deep Backrest Rigidizer Bar. Not available with Ti Back.)*	176.00
TRSB9	☐	PUSH HANDLES BOLT ON HEIGHT ADJUSTABLE *(Includes 4" Deep Backrest Rigidizer Bar. Not available with Ti Back.)*	303.00

FOLDING SEAT BACK HEIGHT (F) (TRSB1 and TRSB2)

PUSH HANDLES (select above)	Short	Medium	Tall	use 0.5" increments
None/Bolt on	9.5"-12.5"	13.5"-17.5"	17"-21.5"	Set at:
Integrated	11.5"-13.5"	14.5"-17.5"	18.5"-21.5"	Set at:
Intergated fold down	14"-16.5"	15"-19.5"	19.5"-22"	Set at:

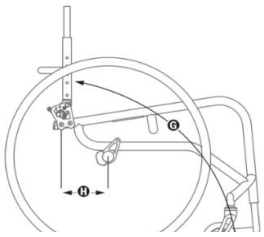

NON-FOLDING, FIXED-HEIGHT (F) TITANIUM SEAT BACK

with New Rounded Rigidizer Bar

(Titanium back will match Frame Finish. Required for fixed Side Guards. Not available with Swing Away Tubular or Swing Away - Flip Back Tubular Armrests and Integrated Push Handles, Integrated Fold-Down Push Handles or Bolt-On Height Adjustable Push Handles.)

Height 5" to 20" in 0.5"steps — Set at: ____ "

AVAILABLE ON ALL BACKS

TRSB11	☐	BACKREST THAT LOCKS IN FOLDED POSITION *(Requires Tension Adjustable by Straps Back Upholstery.)*	0.00
TRSB19	☐	4" DEEP BACKREST RIGIDIZER BAR *(Requires Tension Adjustable by Straps Back Upholstery.)*	0.00

SEAT BACK ANGLE (G)

Measure angle from front of back post to floor.

TRSBA3-80 — 0.00

○ SEAT BACK ANGLE FOR NON-FOLDING BACK 80°				
○ 83°	○ 89°	○ 95°	○ 101°	
○ 86°	○ 92°	○ 98°		

TRSBA3-80 — 0.00

○ SEAT BACK ANGLE FOR NON-FOLDING BACK 80°					
○ 81°	○ 85°	○ 89°	○ 93°	○ 97°	○ 101°
○ 82°	○ 86°	○ 90°	○ 94°	○ 98°	
○ 83°	○ 87°	○ 91°	○ 95°	○ 99°	
○ 84°	○ 88°	○ 92°	○ 96°	○ 100°	

CENTER OF GRAVITY (H)

Measure from front of back post at the seat tube to the center of the rear axle. If no center of gravity is selected, chair will ship with the center of gravity in the rearward-most position.

TRCOG1-1 — 0.00

○ CENTER OF GRAVITY 1"			
○ 1.25"	○ 2.25"	○ 3.25"	○ 4.25"
○ 1.5"	○ 2.5"	○ 3.5"	○ 4.5"
○ 1.75"	○ 2.75"	○ 3.75"	○ 4.75"
○ 2"	○ 3"	○ 4"	○ 5"

REAR WHEEL SPACING (J) / PLUGS

Measure from outside of seat back post to inside of rear tire. TRA 0.75" Rear Wheel Spacing not available with 0° or 2° Camber K. Ergonomic Seat selection may limit available center of gravity.

TRRWS1-0.75	○ REAR WHEEL SPACING 0.75"	○ 1"	○ 1.25"

TRCBR12	☐	CAMBER PLUGS - ADJ REAR WHEEL	0.00
TRCBR9	☐	SPACERS TO INCREASE REARWHEEL SPACING, ADDITIONAL	0.00
TRCBR11	☐	CAMBER PLUGS 2°, 4°, OR 6° ZERO PLAY ALUMINUM *(Not available with Power Adaptable Frame or more than 6° of Camber K.)*	0.00

SEAT UPHOLSTERY

TRSUP1	☐	TENSION ADJUSTABLE BOLT ON SEAT UPHOLSTERY *(Not available with Ergonomic Seat or Tapered Seat T. Black only.)*	0.00
TRSUP2	☐	TENSION ADJUSTABLE BY STRAPS SEAT UPHOLSTERY *(Standard with Ergonomic Seat and Front Seat Width (Seat Taper) T of 1", 2" or 3". Black upholstery only.)*	153.00
TRSUP8	☐	SOLID SEAT, ALUMINUM *(Not available with 10" or 11" Rear Seat Width A, Ergonomic Seat U requires CMD 016)*	254.00
TRSUP0	☐	WITHOUT SEAT UPHOLSTERY	0.00

CAMBER (K) / CAMBER TUBES

TRCBR1-0	○	0° CAMBER ○ 2° ○ 4° ○ 6° *(8° of Camber K may be available through our Creative Mobility Division.)*	0.00
TRCBR15	☐	CAMBER TUBE ALUMINIUM	0.00
TRCBR3	☐	CAMBER TUBE TITANIUM *(Not available with Power Adaptable Frame.)*	176.00

CUSTOM CONFIGURATION OPTIONS

FRONT WHEELS

TRFW24	☐	3"X1.5" LITESPEED BILLETALU WHEEL W/SOFT ROLLTIRE ☐ SILVER HUB ☐ BLACK HUB	165.00
TRFW14	☐	4"X.75" PLASTIC WHEEL W/POLY TIRE *(Not available with Slipstream Fork or Power Adaptable Frame.)*	0.00
TRFW3	☐	4"X.75" LIGHT-UP MICRO-CASTER *(Not available with Slipstream Fork or Power Adaptable Frame.)*	74.00
TRFW26	☐	4"X1.5" LITESPEED PLASTIC WHEEL W/SOFT ROLL TIRE *(Not available with Power Assist, Power Add-on System or Heavy Duty Frame.)*	95.00
TRFW27	☐	4"X1.5" LITESPEED BILLETALU WHEEL W/SOFT ROLLTIRE ☐ SILVER HUB ☐ BLACK HUB	165.00
TRFW6	☐	5"X1" PLASTIC WHEEL W/POLY TIRE *(Not available with 90º Front Angle L, Slipstream Fork or Power Adaptable Frame.)*	0.00
TRFW28	☐	5"X1.5" LITESPEED PLASTIC WHEEL W/SOFT ROLL TIRE *(Not available with 90º Front Angle L or Power Adaptable Frame.)*	95.00
TRFW30	☐	5"X1.5" LITESPEED BILLETALU WHEEL W/SOFT ROLLTIRE ☐ SILVER HUB ☐ BLACK HUB *(Not available with 90º Front Angle L.)*	165.00
TRFW9	☐	6"X1" PLASTIC WHEEL W/POLY TIRE *(Not available with 85º or 90º Front Angle L, Slipstream Fork or Power Adaptable Frame.)*	0.00
TRFW32	☐	6"X1.5" LITESPEED PLASTIC WHEEL W/SOFT ROLL TIRE *(Not available with 85º or 90º Front Angle L, Slipstream Fork or Power Adaptable Frame.)*	95.00
TRFW33	☐	6"X1.5" LITESPEED BILLETALU WHEEL W/SOFT ROLLTIRE ☐ SILVER HUB ☐ BLACK HUB *(Not available with 85º or 90º Front Angle L or Slipstream Fork.)*	165.00

PRECISION LOCK FRONT FORKS

TRFK1	☐	FORK, STANDARD TILITE	0.00
TRFK2	☐	FORK, SLIPSTREAM SINGLE-SIDED TILITE *(Not available with Power Adaptable Frame.)*	176.00
TRGL1	☐	OUT-FRONT GLIDE® SUSPENSION FORKS USER WEIGHT ☐ > 56kg ☐ 56kg-81kg ☐ 81kg-120kg *(Black anodize only. Not available with Heavy Duty Frame.)*	435.00
TRTFS1	☐	FORK STEMS TITANIUM	48.00

STANDARD REAR WHEELS

TRRW14-20	○	WHEELS REAR 20" TILITE SHADOW	○ 22"	○ 24"	○ 25"	○ 26"	0.00
		25" and 26" require 15" minimum Seat depth (B)					

PERFORMANCE REAR WHEELS

(See Rear Seat Height Ranges Chart for Rear Seat Height D limitations.)

TRRW7-22	○	WHEELS REAR SPINERGY SPOX 22"	○ 24"	○ 25"	○ 26"		495.00
		Spinergy SPOX	☐ RED	☐ BLACK	☐ BLUE	☐ WHITE	
		25" and 26" require 15" minimum Seat depth (B)					
TRRW8-22	○	WHEELS REAR SPINERGY LX 22"	○ 24"	○ 25"	○ 26"		695.00
		25" and 26" require 15" minimum Seat depth (B)					
	○	BLACK	○ RED	○ BLUE	○ WHITE		
	○	BRIGHT ORANGE	○ FLAMINGO PINK	○ PURPLE			
TRRW9-22	○	22" (501) SPINERGY DESIGN LAB LX	○ 24"	○ 25"	○ 26"		695.00
		25" and 26" require 15" minimum Seat depth (B)					
	○	BLACK	○ RED	○ BLUE	○ WHITE		
	○	BRIGHT ORANGE	○ FLAMINGO PINK	○ PURPLE			
		(If same color is selected, anodized hubs and rims match color anodized package on page 1. Available with black spokes only.)					
TRRW16-24	○	WHEELS REAR 24" CARBON BLADE	○ 25"				1150.00
		(Not available with Heavy Duty Frame, 25" requires 15" minimum Seat depth (B))					
TRRW17-20	○	WHEELS REAR 20" SKYWAY® MAGS	○ 22"	○ 24"			100.00
		(Not available with Heavy Duty Frame, Short Tabs, Quad Release Axles, Spoke Guards or Omit Handrims Option. Requires Aluminum Sliver Anodized Handrims.)					

AXLES

TRAXL1	☐	AXLE QUICK RELEASE STAINLESS	0.00
TRAXL2	☐	AXLE QUICK RELEASE TITANIUM	226.00
TRAXL3	☐	AXLE QUAD RELEASE	139.00
		(Not available with Mag or 26"(590) Spinergy Spox or LX Rear Wheels.)	

PNEUMATIC REAR TIRES

TRRTR1	☐	TIRES REAR 22", 24" OR 26" TREADED	0.00
TRRTR2	☐	TIRES REAR 22", 24" OR 26" TREADED, AIRLESS INSERT	85.00
		(Not available with Spinergy Carbon Blade Rear Wheels.)	
TRRTR31	☐	MBL SPEEDLITE (PNEUMATIC)	0.00
TRRTR30	☐	TIRES REAR 24",25" OR 26" PRIMO SENTINEL PNEUMATIC	95.00
TRRTR8	☐	TIRES REAR 24" 25"OR 26"SCHWALBE MARATHON+ EVOL.	95.00
TRRTR24	☐	TIRES REAR, KENDA KOBRA KNOBBY	95.00

SOLID REAR TIRES

(Not available with Spinergy Carbon Blade Rear Wheels.)

TRRTR22	☐	TIRES REAR, SOLID, PRIMOEXPRESS	95.00
TRRTR23	☐	TIRES REAR, SOLID, PRIMOACTIVE	95.00

HANDRIMS

Handrims by OUT-FRONT®

TRRIM1	☐	ALUMINUM- SILVER ANODIZED	0.00
TRRIM21	☐	ALUMINUM- BLACK ANODIZED *(Not available with 20"(451) Rear Wheels.)*	49.00
TRRIM12	☐	TITANIUM- SATIN FINISH *(Not available with 20"(451) or 22"(501) Rear Wheels, or 24"(540) Knobby tires.)*	290.00
TRRIM10	☐	THE SURGE™ BY OUT-FRONT,ALL-IN-1 OVAL, L PROFILE *(Not available with 20"(451) Rear Wheels.)*	290.00
TRRIM11	☐	THE SURGE™ LT BY OUT-FRONT ALL-IN-1 OVAL S PROFILE *(Not available with 20"(451) Rear Wheels.)*	290.00
TRRIM20	☐	Q-GRIP HANDRIM *(Not available with 20"(451)Rear Wheels.)*	290.00

The Natural-Fit® (Original, Larger Profile)

(Not available with 20"(451) Rear Wheels.)

TRRIM14	☐	NATURAL-FIT® BY OUT-FRONT - STANDARD GRIP *(Not available with Short Tabs or Spinergy Carbon Blade Rear Wheels*	290.00
TRRIM15	☐	NATURAL-FIT® BY OUT-FRONT - SUPER GRIP *(Not available with Short Tabs or Spinergy Carbon Blade Rear Wheels.)*	290.00
TRRIM16	☐	NATURAL-FIT® BY OUT-FRONT - WITHOUT THUMB GRIP	290.00

The Natural-Fit® LT (Reduced Weight, Smaller Profile)

(Not available with 20"(451) Rear Wheels.)

TRRIM17	☐	NATURAL-FIT® LT BY OUT-FRONT - STANDARD GRIP *(Not available with Short Tabs or Spinergy Carbon Blade Rear Wheels.)*	290.00
TRRIM18	☐	NATURAL-FIT® LT BY OUT-FRONT - SUPER GRIP *(Not available with Short Tabs or Spinergy Carbon Blade Rear Wheels.)*	290.00
TRRIM19	☐	NATURAL-FIT® LT BY OUT-FRONT - WITHOUT THUMB GRIP	290.00

Additional handrim options

TRRIM5	☐	PLASTIC COATED- BLACK	117.00

Tab length

TRRIM7	☐	HANDRIM TAB LENGTH- LONGTABS	0.00
TRRIM8	☐	HANDRIM TAB LENGTH- SHORT TABS *(Not available with Mag Rear Wheels or The Natural-Fit® Handrims with Thumb Grip.)*	19.00

WHEEL LOCKS

Wheel locks by OUT FRONT

TRWLK7	☐	COMPACT COMPOSITE PUSH TO LOCK WHEEL BY OUT-FRONT *(Available with .75" to 1.5" Rear Wheel Spacing J only.)*	0.00
TRWLK8	☐	COMPACT COMPOSITE PULL TO LOCK WHEEL BY OUT-FRONT *(Available with .75" to 1.5" Rear Wheel Spacing J only.)*	0.00
TRWLK10	☐	EXTENSION HANDLES FOR COMPACT COMPOSITE PUSH/PULL	80.00

Additional wheel locks

TRWLK11	☐	MBL COMPOSITE SCISSOR LOCK	132.00
TRWLK3	☐	WHEEL LOCK UNI-LOCK ☐ Push ☐ Pull	148.00
TRWLK4	☐	EXTENSION HANDLES FOR UNI-LOCK	80.00
TRWLK15	☐	GRADE AIDS PUSH TO LOCK	164.00

(Not available with solid rear tires)

SIDE GUARDS

Aluminium

TRSDG2-S	☐	SIDE GUARDS ALUMINUM, RIGID, REMOVABLE, SMALL ☐ Small ☐ Std	176.00
TRSDG3-S	☐	SIDE GUARDS ALU, QUAD REMOVABLE W/ HOLE SMALL ☐ Small ☐ Std	184.00
TRSDG4-S	☐	SIDE GUARDS ALUMINUM, FOLD DOWN RIGID, SMALL ☐ Small ☐ Std *(Not available with Ergonomic Seat.)*	303.00
TRSDG6	☐	SIDE GUARDS ALUMINUM, FENDERED ADJUSTABLE *(Available with 24" and 25" Rear Wheels. Requires Rear Seat Height D of 14.5" to 18.5".)*	303.00

New 3k Weave Carbon Fiber

TRSDG7-S	☐	SIDE GUARDS CARBON FIBER, RIGID REMOVABLE SMALL ☐ Small ☐ Large	276.00
TRSDG8-S	☐	SIDE GUARDS CARBON, QUADREMOVABLE WITH HOLE SMALL ☐ Small ☐ Large	284.00
TRSDG9-S	☐	SIDE GUARDS CARBON FIBER, FOLD DOWN RIGID, SMALL ☐ Small ☐ Large *(Not available with Ergonomic Seat or Carbon Edition.)*	412.00
TRSDG11	☐	CARBON FIBER FENDERED ADJUSTABLE *(Available with 24" and 25" Rear Wheels. Requires Rear Seat Height D of 14.5" to 18.5".)*	362.00

Available on Aluminum and Carbon Fiber Non-Fendered Side Guards

TRSDG13	☐	SIDE GUARDS CUSTOM CUT TO PROFILE OF REAR WHEELS	280.00

ARMRESTS

(Desk Arms come with built-in Side Guards.)

Tubular Armrests

TRARM1-9	☐	SWING AWAY TUBULAR 6.5"-9.5" *(Not Available with Non-Folding, Fixed Height Titanium Seat Back or Height Adjustable Push Handles.)*	☐ 9.5"- 12.5"	194.00
TRARM4-9	☐	SWING AWAY FLIP BACK TUBULAR 8.3"-11.5" *(Not Available with Non-Folding, Fixed Height Titanium Seat Back.)*		280.00

Single Post Desk Arms

TRARM2-9-S	☐	REMOV. ADJ. DESK ARM RIGID GUARD 9"-12"/S ☐ armrest pad length STD (10") *(Requires 14" minimum Seat Depth B. Not available with Ergonomic Seat.)*	☐ 12"-15" Full length (12")	303.00
TRARM3-9-S	☐	REMOV. ADJ. DESK ARM RIGID GUARD+TRANSF. 9"-12"/S ☐ armrest pad length STD (10") *(Requires 15" minimum Seat Depth B. Not Available with Ergonomic Seat.)*	☐ 12"-15" ☐ Full length (12")	331.00
TRARM5	☐	ARMRESTS COVERED IN BLACK ULTRASUEDE *(Not available with Desk Arms)*		100.00

SEAT BELTS

TRBLT1	☐	VELCRO ADJUSTABLE, BLACKNYLON WEBBING	40.00
TRBLT2	☐	BODYPOINT AUTO-STYLE RELEASE BUCKLE	92.00
TRBLT4	☐	BODYPOINT 1" PUSH-BUTTONBUCKLE PADDED -AUTO STYLE *(Not available with 19" or 20" Rear Seat Widths A.)*	167.00
TRBLT5	☐	BODYPOINT 1.5" PUSH BUTTON BUCKLE PADDED AUTOSTYLE *(Not available with 19" or 20" Rear Seat Widths A.)*	167.00
TRBLT10	☐	BODYPOINT OPTIONAL BAND CLAMP MOUNTING HARDWARE	19.00
TRBLT16	☐	BODYPOINT 1" WIDE EVOFLEX, PUSH-BUTTON BUCKLE	172.00

CALFSTRAPS

TRCLF2-S	☐	CALFSTRAP VELCRO ADJUSTABLE S *(Recommended for 9" - 12" Footrest Widths.)*	32.00
TRCLF2-M	☐	CALFSTRAP VELCRO ADJUSTABLE M *(Recommended for 11" - 15" Footrest Widths.)*	32.00
TRCLF2-L	☐	CALFSTRAP VELCRO ADJUSTABLE L *(Recommended for 14" - 17" Footrest Widths.)*	32.00
TRCLF2-XL	☐	CALFSTRAP VELCRO ADJUSTABLE XL *(Recommended for 16" - 19" Footrest Widths.)*	32.00
TRCLF3-M	☐	BODYPOINT PADDED VELCRO ADJUSTABLE M *(Recommended for 11" - 15" Footrest Widths.)*	95.00
TRCLF3-L	☐	BODYPOINT PADDED VELCRO ADJUSTABLE L *(Recommended for 16" - 19" Footrest Widths.)*	95.00
TRCLF1	☐	BUCKLE ADJUSTABLE, BLACKNYLON WEBBING	22.00

RESIDUAL LIMB SUPPORT

TRRSL1-L		#N/A	#N/A

SEAT POUCH ☐

TRPCH3	☐	SEAT POUCH BLACK NYLON	49.00
TRPCH5	☐	BODYPOINT MOBILITY BAG	96.00

SPOKE GUARDS

TRGRD1	☐	CLEAR LEXAN WITH TIMOTION LOGO *(Not available with Mag Rear Wheels.)*	117.00

ANTI-TIP

TRTIP1	☐	ANTI TIP REAR ALUMINUM- BLACK	145.00
TRTIP2	☐	ANTI TIP REAR FLIP-UP USER FRIENDLY	298.00

ACCESSORIES

TRUEST1-12	☐	UPPER EXTREMITY SUPPORT TRAY 12-14" *(Requires Armrests.)*	☐ 13-15"	258.00
TRLUG1	☐	LUGGAGE CARRIERS		132.00
TRMPCT2-BL	☐	IMPACT GUARDS NEOPRENE BLACK		95.00
TRCH1	☐	CRUTCH HOLDER		132.00